TÜRTECHNIK | DOOR TECHNOLOGY

B-55600-34-4-6
SECUREconnect 50

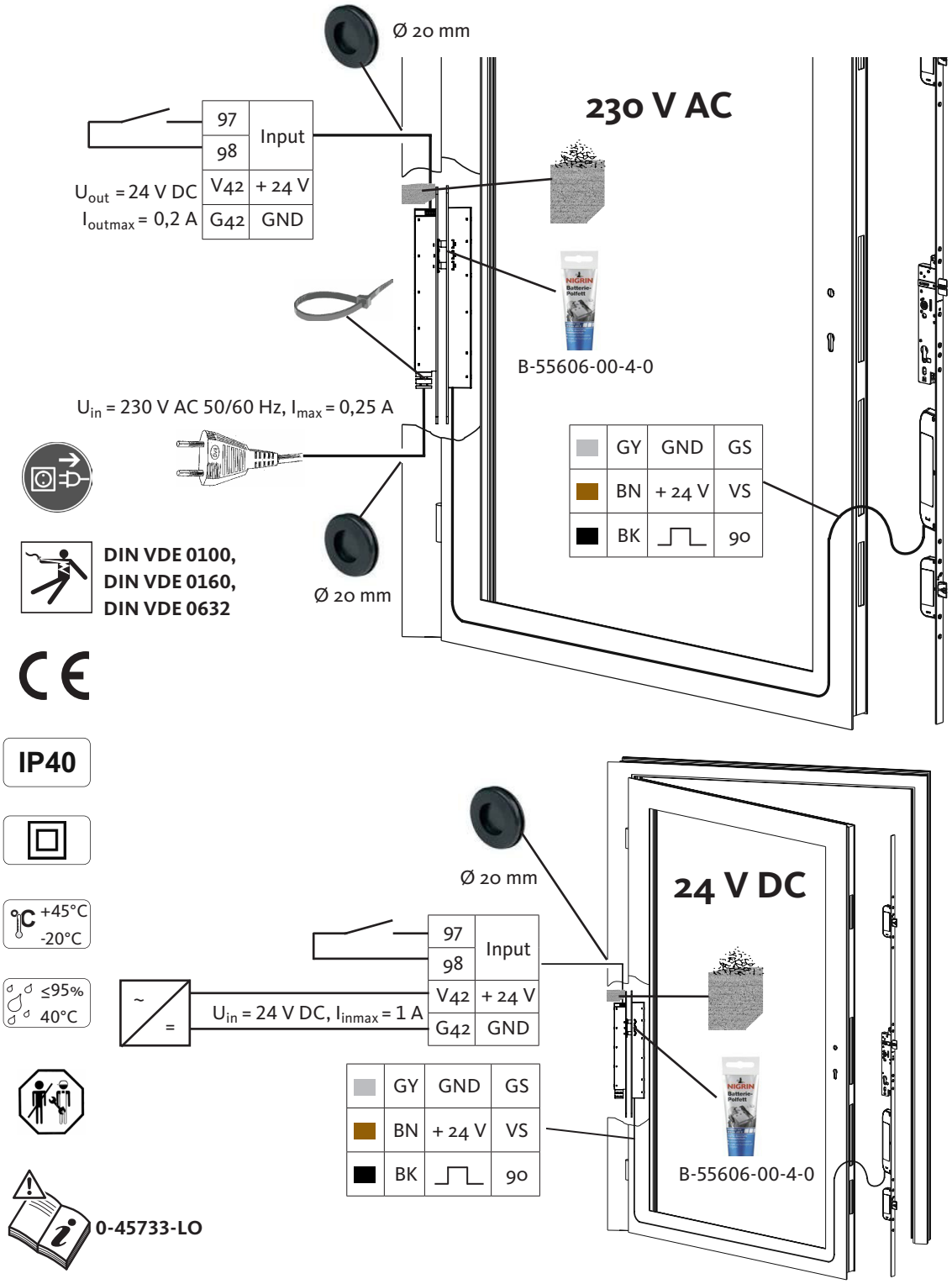

Die Netztrennung erfolgt durch Ziehen des Netzsteckers aus der Steckdose. Die Steckdose muss gut zugänglich sein. Falls das SECURE*connect* 50 fest an die Stromversorgung angeschlossen wird, muss es möglich sein, die Abschaltung mit Hilfe einer geeigneten, entsprechend gekennzeichneten Vorrichtung (z.B. Schalter, Sicherungsautomat im Hausverteiler) durchzuführen.

Disconnecting the unit from the mains is done by pulling the power plug from the socket. The socket must be freely accessible. If SECURE*connect* 50 is connected to the electricity supply permanently, it is necessary to provide for switch off by means of a suitable and appropriately marked device on the building's distribution board, e.g. a switch, fuse, or automatic cutout.

Disconnecting the unit from the mains is done by pulling the power plug from the socket. The socket must be freely accessible. If SECURE*connect* 50 is connected to the electricity supply permanently, it is necessary to provide for switch off by means of a suitable and appropriately marked device on the building's distribution board, e.g. a switch, fuse, or automatic cutout.

Disconnecting the unit from the mains is done by pulling the power plug from the socket. The socket must be freely accessible. If SECURE*connect* 50 is connected to the electricity supply permanently, it is necessary to provide for switch off by means of a suitable and appropriately marked device on the building's distribution board, e.g. a switch, fuse, or automatic cutout.

C59501176 | 02 | 03.2015 | EE | Printed in Germany

Vorsprung mit System

Securing technology for you

B-55600-34-4-6
SECUREconnect 50

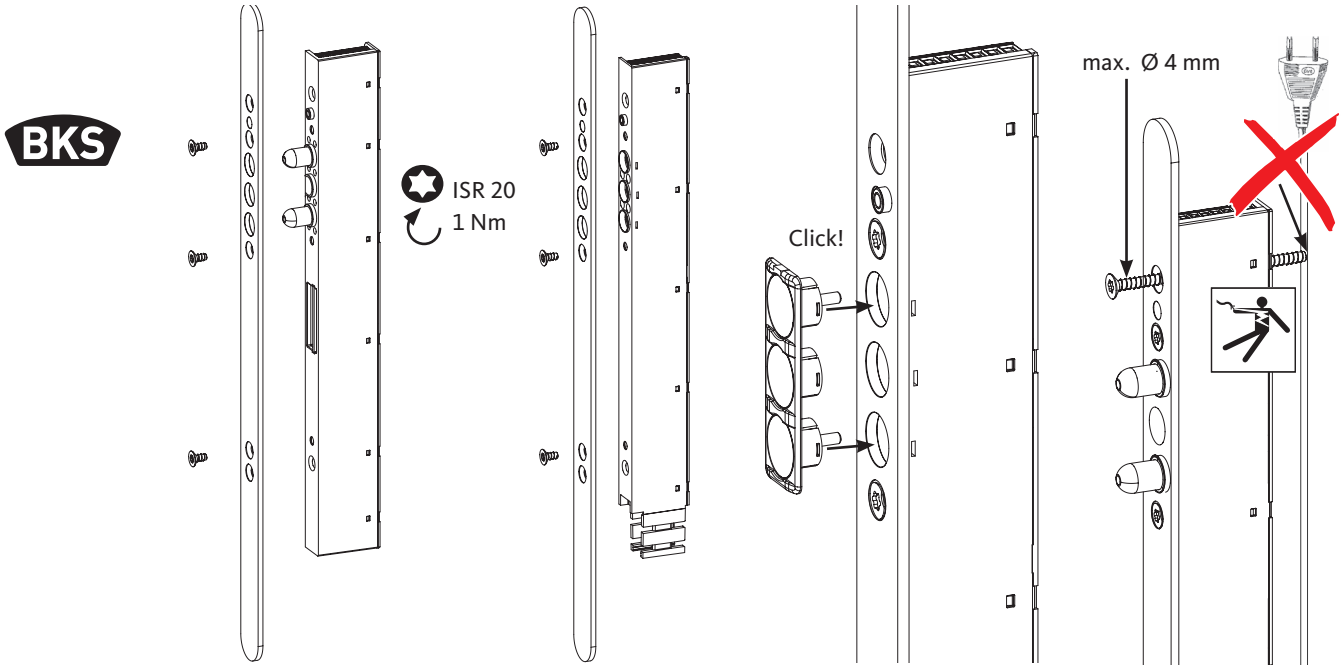

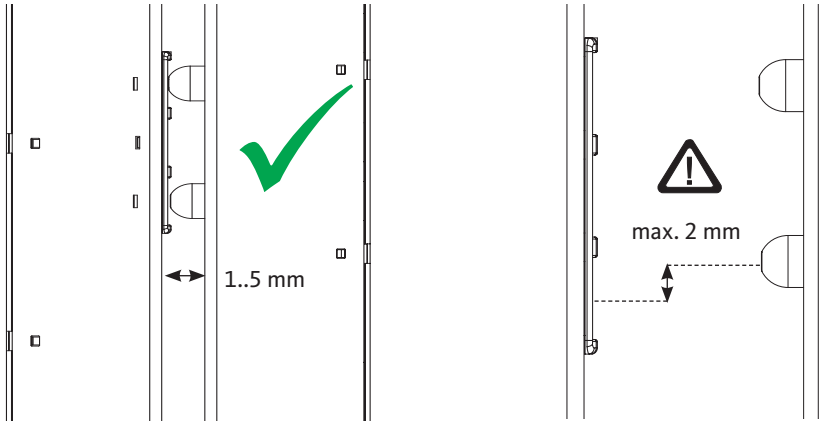

0-45733-LO

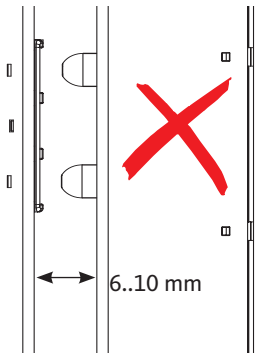

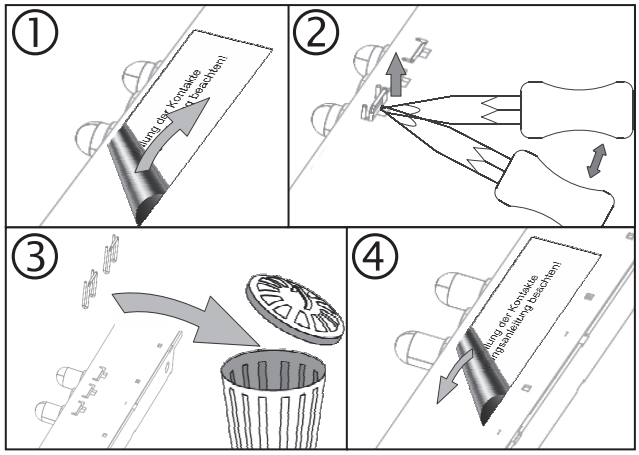

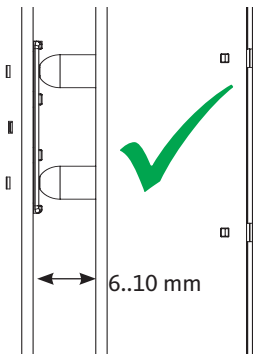

Bei häufiger Nutzung erneuern Sie das Kontaktfett B-55606-00-4-0 zum Schutz der Kontakte des SECUREconnects vor Feuchtigkeit und Korrosion.

For frequent use we recommend to renew the B-55606-00-4-0 contact grease to protect the contacts of the SECUREconnect against humidity and corrosion.

For frequent use we recommend to renew the B-55606-00-4-0 contact grease to protect the contacts of the SECUREconnect against humidity and corrosion.

For frequent use we recommend to renew the B-55606-00-4-0 contact grease to protect the contacts of the SECUREconnect against humidity and corrosion.

Herausgeber | Editor:
BKS GmbH
Heidestr. 71
D-42549 Velbert
Tel. + 49 (0) 20 51 2 01-0
Fax + 49 (0) 20 51 2 01-97 33
www.g-u.com

Fehler, Irrtümer und technische Änderungen vorbehalten.
Errors and omissions reserved. Subject to technical modifications.
Sous réserve d'erreurs et de modifications techniques.
Reservado el derecho a realizar modificaciones técnicas. Salvo error u omission.